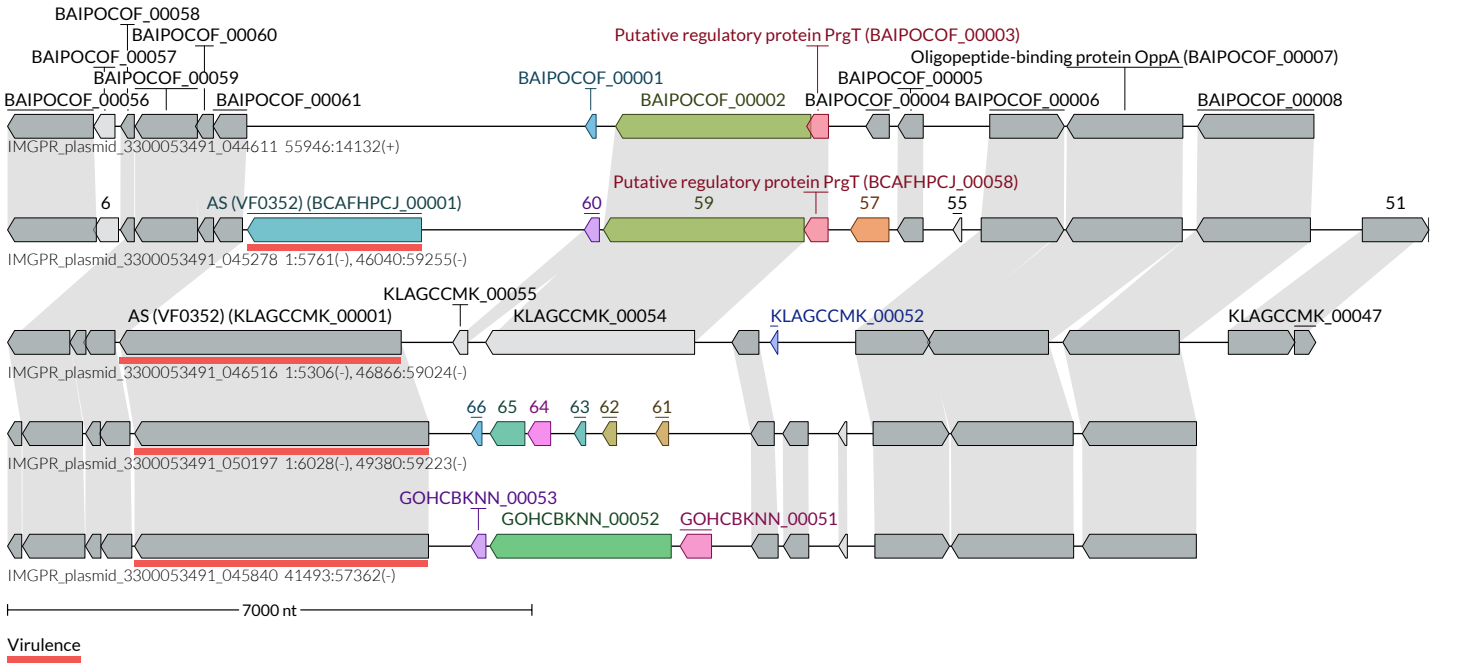
BAIPOCOF_00058
BAIPOCOF_00060
BAIPOCOF_00057
BAIPOCOF_00059
BAIPOCOF_00056
BAIPOCOF_00061
BAIPOCOF_00001
BAIPOCOF_00002
Putative regulatory protein PrgT (BAIPOCOF_00003)
BAIPOCOF_00005
BAIPOCOF_00004
BAIPOCOF_00006
Oligopeptide-binding protein OppA (BAIPOCOF_00007)
BAIPOCOF_00008
IMGPR_plasmid_3300053491_044611 55946:14132(+)
6
AS (VF0352) (BCAFHPCJ_00001)
60
59
Putative regulatory protein PrgT (BCAFHPCJ_00058)
57
55
51
IMGPR_plasmid_3300053491_045278 1:5761(-), 46040:59255(-)
KLAGCCMK_00055
AS (VF0352) (KLAGCCMK_00001)
KLAGCCMK_00054
KLAGCCMK_00052
KLAGCCMK_00047
IMGPR_plasmid_3300053491_046516 1:5306(-), 46866:59024(-)
66
65
64
63
62
61
IMGPR_plasmid_3300053491_050197 1:6028(-), 49380:59223(-)
GOHCBKNN_00053
GOHCBKNN_00052
GOHCBKNN_00051
IMGPR_plasmid_3300053491_045840 41493:57362(-)
7000 nt
Virulence