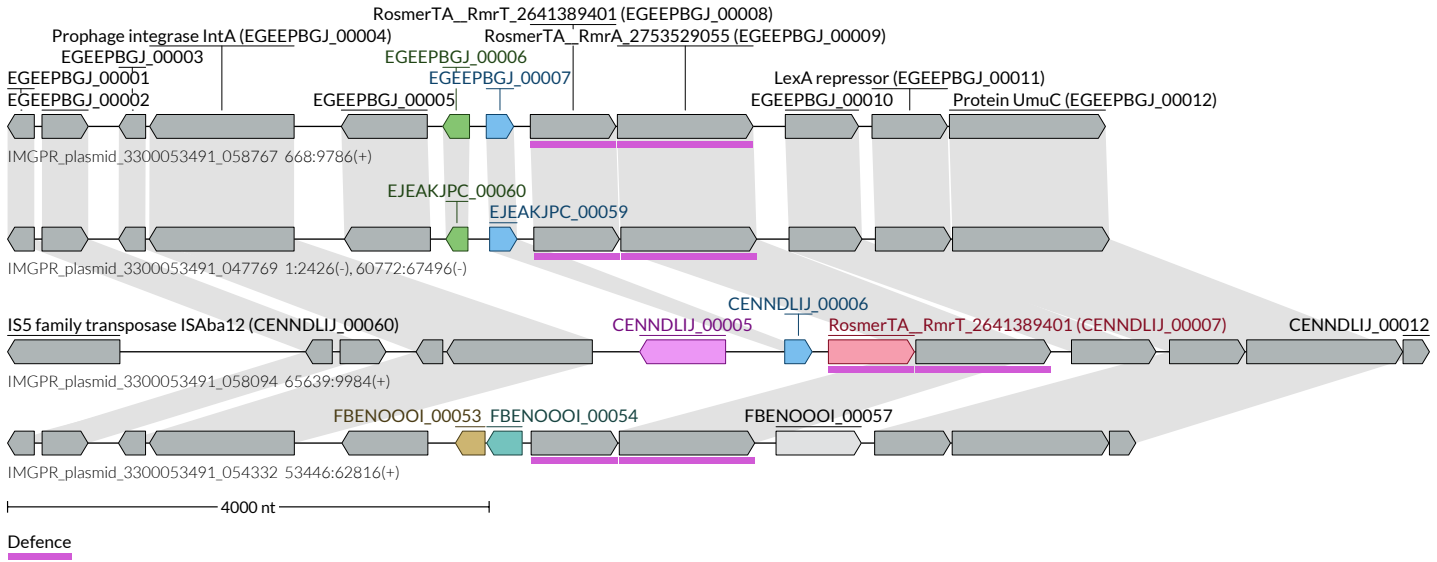
RosmerTA__RmrT_2641389401 (EGEEPBGJ_00008)
Prophage integrase IntA (EGEEPBGJ_00004)
RosmerTA__RmrA_2753529055 (EGEEPBGJ_00009)
EGEEPBGJ_00003
EGEEPBGJ_00006
EGEEPBGJ_00001
EGEEPBGJ_00007
LexA repressor (EGEEPBGJ_00011)
EGEEPBGJ_00002
EGEEPBGJ_00005
EGEEPBGJ_00010
Protein UmuC (EGEEPBGJ_00012)
IMGPR_plasmid_3300053491_058767 668:9786(+)
EJEAKJPC_00060
EJEAKJPC_00059
IMGPR_plasmid_3300053491_047769 1:2426(-), 60772:67496(-)
CENNDLIJ_00006
IS5 family transposase ISAba12 (CENNDLIJ_00060)
CENNDLIJ_00005
RosmerTA__RmrT_2641389401 (CENNDLIJ_00007)
CENNDLIJ_00012
IMGPR_plasmid_3300053491_058094 65639:9984(+)
FBENOOOI_00053
FBENOOOI_00054
FBENOOOI_00057
IMGPR_plasmid_3300053491_054332 53446:62816(+)
4000 nt
Defence