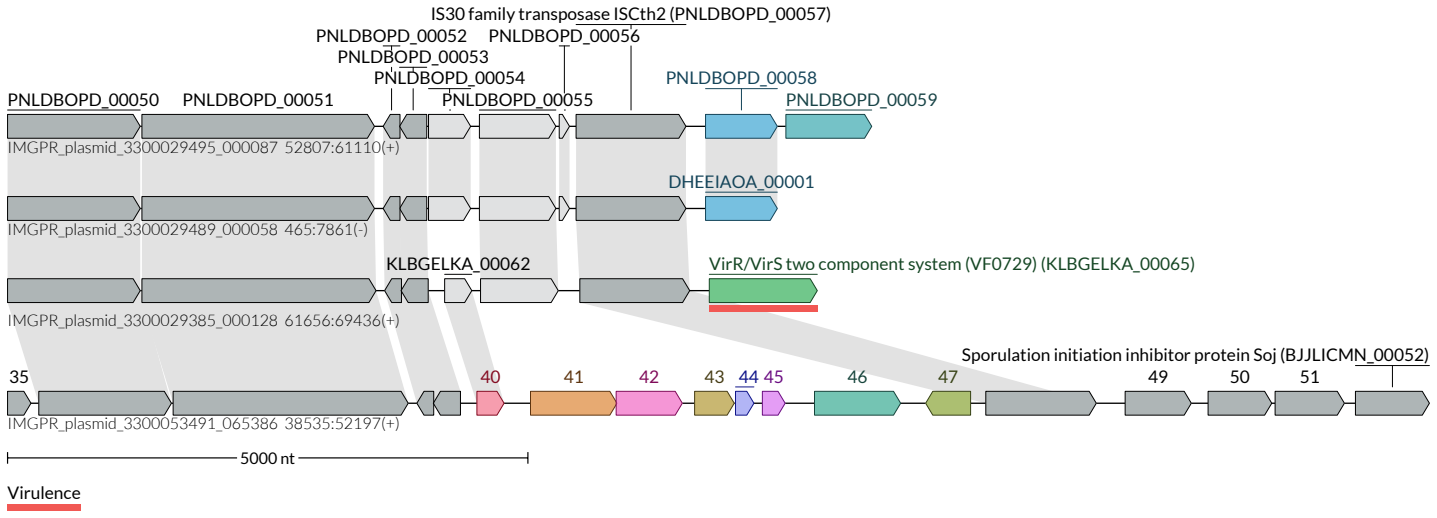
IS30 family transposase ISCth2 (PNLDBOPD_00057)
PNLDBOPD_00052
PNLDBOPD_00056
PNLDBOPD_00053
PNLDBOPD_00054
PNLDBOPD_00058
PNLDBOPD_00050
PNLDBOPD_00051
PNLDBOPD_00055
PNLDBOPD_00059
IMGPR_plasmid_3300029495_000087 52807:61110(+)
DHEEIAOA_00001
IMGPR_plasmid_3300029489_000058 465:7861(-)
KLBGELKA_00062
VirR/VirS two component system (VF0729) (KLBGELKA_00065)
IMGPR_plasmid_3300029385_000128 61656:69436(+)
Sporulation initiation inhibitor protein Soj (BJJLICMN_00052)
35
40
41
42
43
44
45
46
47
49
50
51
IMGPR_plasmid_3300053491_065386 38535:52197(+)
5000 nt
Virulence