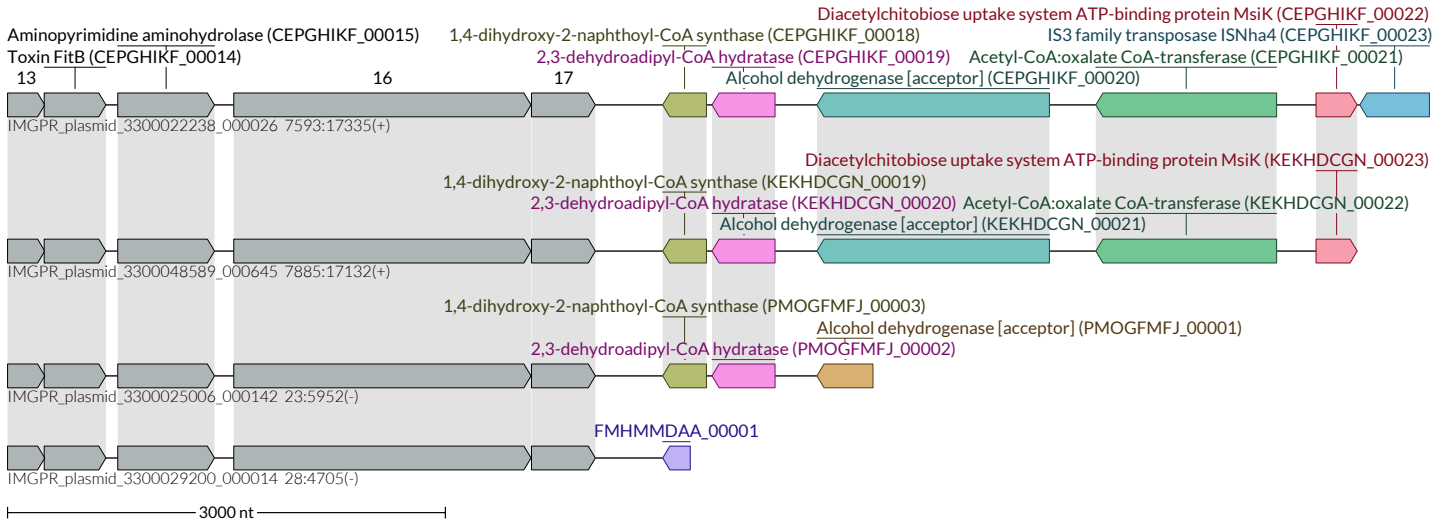
Aminopyrimidine aminohydrolase (CEPGHIKF_00015)
Toxin FitB (CEPGHIKF_00014)
1,4-dihydroxy-2-naphthoyl-CoA synthase (CEPGHIKF_00018)
Diacetylchitobiose uptake system ATP-binding protein MsiK (CEPGHIKF_00022)
IS3 family transposase ISNha4 (CEPGHIKF_00023)
2,3-dehydroadipyl-CoA hydratase (CEPGHIKF_00019)
Acetyl-CoA:oxalate CoA-transferase (CEPGHIKF_00021)
13
16
17
Alcohol dehydrogenase [acceptor] (CEPGHIKF_00020)
IMGPR_plasmid_3300022238_000026 7593:17335(+)
Diacetylchitobiose uptake system ATP-binding protein MsiK (KEKHDCGN_00023)
1,4-dihydroxy-2-naphthoyl-CoA synthase (KEKHDCGN_00019)
2,3-dehydroadipyl-CoA hydratase (KEKHDCGN_00020)
Acetyl-CoA:oxalate CoA-transferase (KEKHDCGN_00022)
Alcohol dehydrogenase [acceptor] (KEKHDCGN_00021)
IMGPR_plasmid_3300048589_000645 7885:17132(+)
1,4-dihydroxy-2-naphthoyl-CoA synthase (PMOGFMFJ_00003)
Alcohol dehydrogenase [acceptor] (PMOGFMFJ_00001)
2,3-dehydroadipyl-CoA hydratase (PMOGFMFJ_00002)
IMGPR_plasmid_3300025006_000142 23:5952(-)
FMHMMDAA_00001
IMGPR_plasmid_3300029200_000014 28:4705(-)
3000 nt