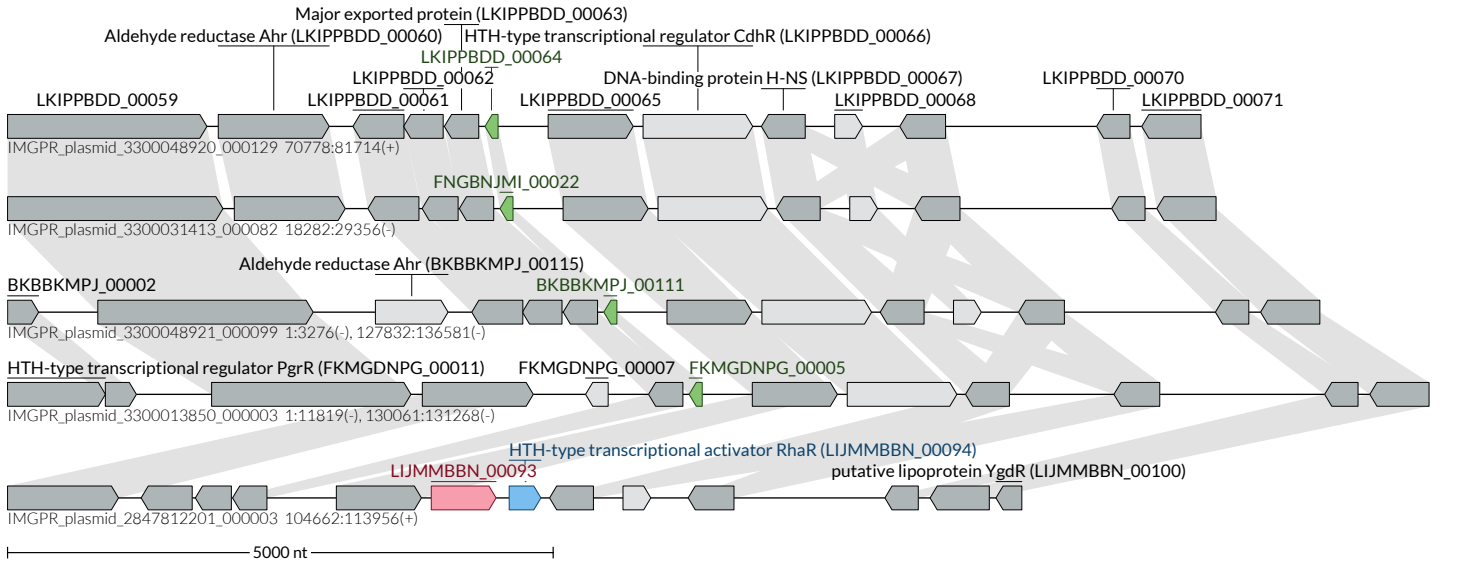
Major exported protein (LKIPPBDD_00063)
Aldehyde reductase Ahr (LKIPPBDD_00060)
HTH-type transcriptional regulator CdhR (LKIPPBDD_00066)
LKIPPBDD_00064
LKIPPBDD_00062
DNA-binding protein H-NS (LKIPPBDD_00067)
LKIPPBDD_00070
LKIPPBDD_00059
LKIPPBDD_00061
LKIPPBDD_00065
LKIPPBDD_00068
LKIPPBDD_00071
IMGPR_plasmid_3300048920_000129 70778:81714(+)
FNGBNJMI_00022
IMGPR_plasmid_3300031413_000082 18282:29356(-)
Aldehyde reductase Ahr (BKBBKMPJ_00115)
BKBBKMPJ_00002
BKBBKMPJ_00111
IMGPR_plasmid_3300048921_000099 1:3276(-), 127832:136581(-)
HTH-type transcriptional regulator PgrR (FKMGDNPG_00011)
FKMGDNPG_00007
FKMGDNPG_00005
IMGPR_plasmid_3300013850_000003 1:11819(-), 130061:131268(-)
HTH-type transcriptional activator RhaR (LIJMMBBN_00094)
LIJMMBBN_00093
putative lipoprotein YgdR (LIJMMBBN_00100)
IMGPR_plasmid_2847812201_000003 104662:113956(+)
5000 nt