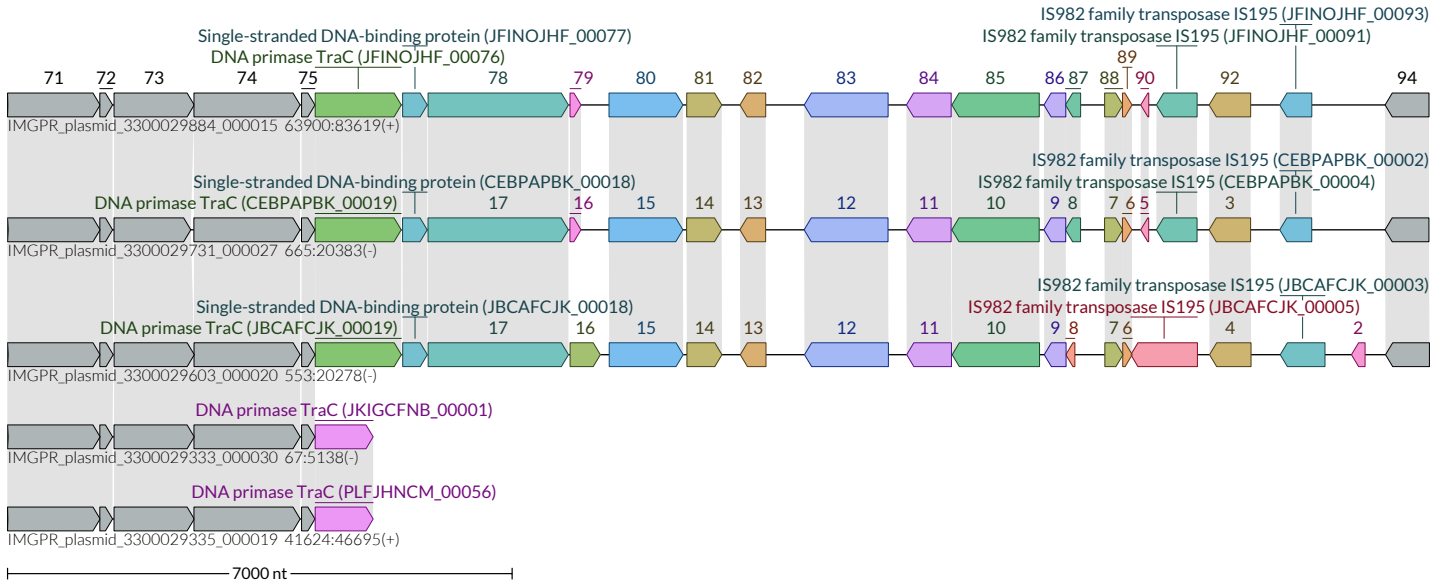
Single-stranded DNA-binding protein (JFINOJHF_00077)
DNA primase TraC (JFINOJHF_00076)
IS982 family transposase IS195 (JFINOJHF_00093)
IS982 family transposase IS195 (JFINOJHF_00091)
71 72 73 74 75 78 79 80 81 82 83 84 85 86 87 88 89 90 92 94
IMGPR_plasmid_3300029884_000015 63900:83619(+)
Single-stranded DNA-binding protein (CEBPAPBK_00018)
DNA primase TraC (CEBPAPBK_00019)
IS982 family transposase IS195 (CEBPAPBK_00002)
IS982 family transposase IS195 (CEBPAPBK_00004)
17 16 15 14 13 12 11 10 9 8 7 6 5 3
IMGPR_plasmid_3300029731_000027 665:20383(-)
Single-stranded DNA-binding protein (JBCAFCJK_00018)
DNA primase TraC (JBCAFCJK_00019)
IS982 family transposase IS195 (JBCAFCJK_00003)
IS982 family transposase IS195 (JBCAFCJK_00005)
17 16 15 14 13 12 11 10 9 8 7 6 4 2
IMGPR_plasmid_3300029603_000020 553:20278(-)
DNA primase TraC (JKIGCFNB_00001)
IMGPR_plasmid_3300029333_000030 67:5138(-)
DNA primase TraC (PLFJHNCM_00056)
IMGPR_plasmid_3300029335_000019 41624:46695(+)
7000 nt