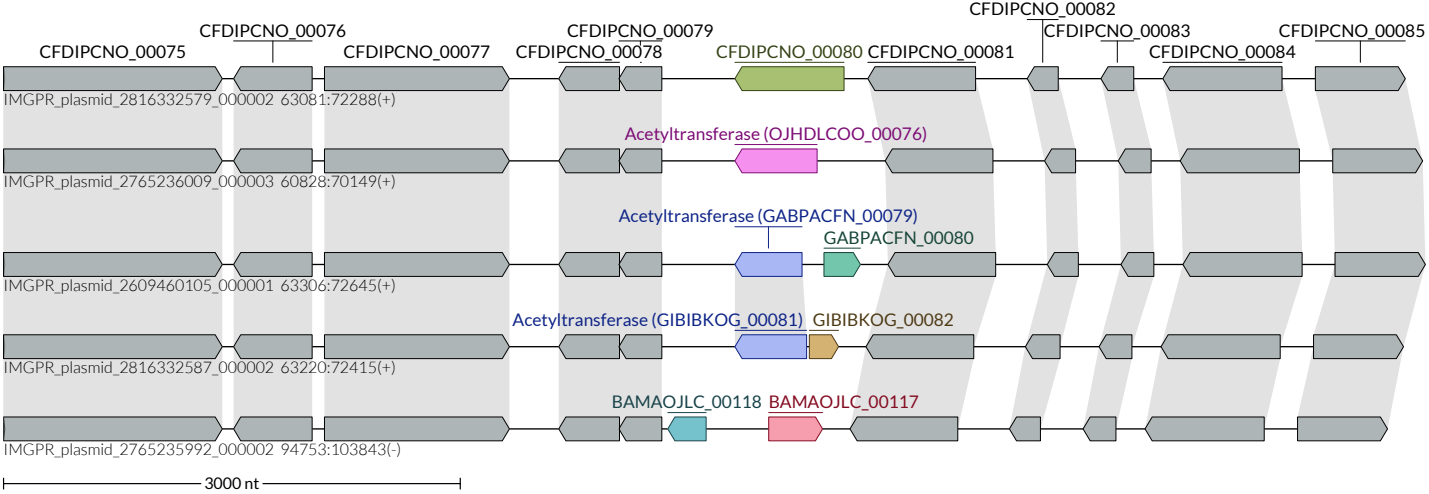
CFDIPCNO_00075
CFDIPCNO_00076
CFDIPCNO_00077
CFDIPCNO_00078
CFDIPCNO_00079
CFDIPCNO_00080
CFDIPCNO_00081
CFDIPCNO_00082
CFDIPCNO_00083
CFDIPCNO_00084
CFDIPCNO_00085
IMGPR_plasmid_2816332579_000002 63081:72288(+)
Acetyltransferase (OJHDLCOO_00076)
IMGPR_plasmid_2765236009_000003 60828:70149(+)
Acetyltransferase (GABPACFN_00079)
GABPACFN_00080
IMGPR_plasmid_2609460105_000001 63306:72645(+)
Acetyltransferase (GIBIBKOG_00081)
GIBIBKOG_00082
IMGPR_plasmid_2816332587_000002 63220:72415(+)
BAMAOJLC_00118
BAMAOJLC_00117
IMGPR_plasmid_2765235992_000002 94753:103843(-)
3000 nt