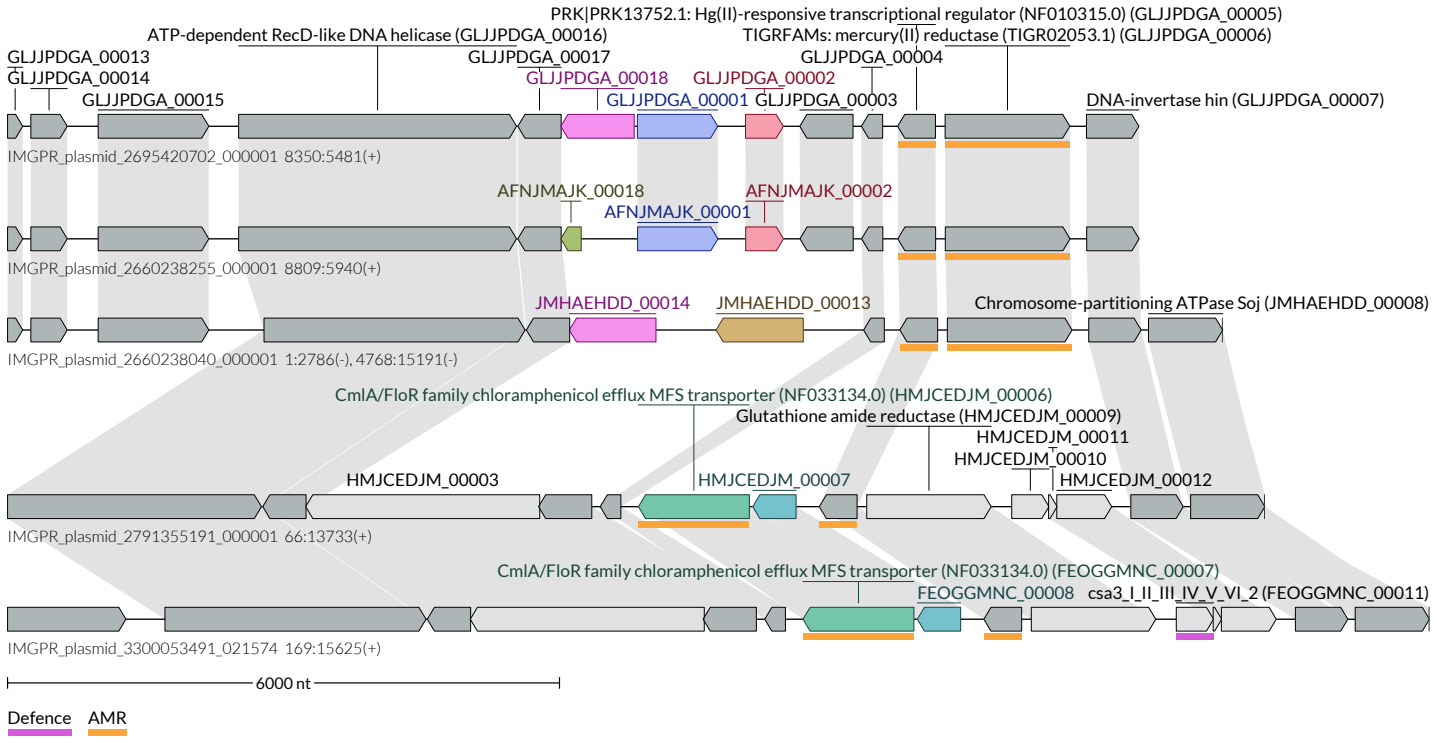
PRK|PRK13752.1: Hg(II)-responsive transcriptional regulator (NF010315.0) (GLJJPDGA_00005)
ATP-dependent RecD-like DNA helicase (GLJJPDGA_00016)
TIGRFAMs: mercury(II) reductase (TIGR02053.1) (GLJJPDGA_00006)
GLJJPDGA_00013
GLJJPDGA_00014
GLJJPDGA_00015
GLJJPDGA_00017
GLJJPDGA_00018
GLJJPDGA_00002
GLJJPDGA_00004
GLJJPDGA_00001
GLJJPDGA_00003
DNA-invertase hin (GLJJPDGA_00007)
IMGPR_plasmid_2695420702_000001 8350:5481(+)
AFNJMAJK_00018
AFNJMAJK_00002
AFNJMAJK_00001
IMGPR_plasmid_2660238255_000001 8809:5940(+)
JMHAEHDD_00014
JMHAEHDD_00013
Chromosome-partitioning ATPase Soj (JMHAEHDD_00008)
IMGPR_plasmid_2660238040_000001 1:2786(-), 4768:15191(-)
CmlA/FloR family chloramphenicol efflux MFS transporter (NF033134.0) (HMJCEDJM_00006)
Glutathione amide reductase (HMJCEDJM_00009)
HMJCEDJM_00011
HMJCEDJM_00010
HMJCEDJM_00003
HMJCEDJM_00007
HMJCEDJM_00012
IMGPR_plasmid_2791355191_000001 66:13733(+)
CmlA/FloR family chloramphenicol efflux MFS transporter (NF033134.0) (FEOGGMNC_00007)
FEOGGMNC_00008
csa3_I_II_III_IV_V_VI_2 (FEOGGMNC_00011)
IMGPR_plasmid_3300053491_021574 169:15625(+)
6000 nt
Defence
AMR