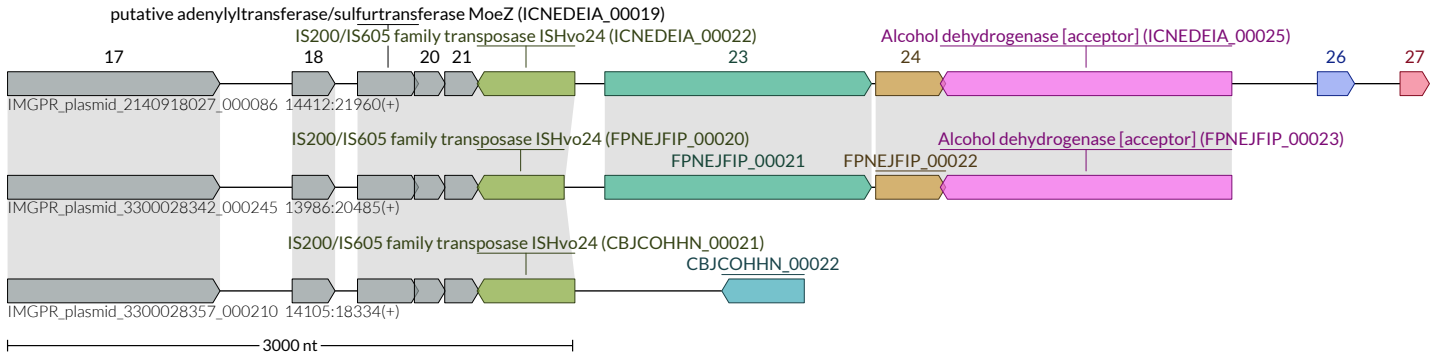
putative adenylyltransferase/sulfurtransferase MoeZ (ICNEDEIA_00019)
IS200/IS605 family transposase ISHvo24 (ICNEDEIA_00022)
Alcohol dehydrogenase [acceptor] (ICNEDEIA_00025)
17
18
20
21
23
24
26
27
IMGPR_plasmid_2140918027_000086 14412:21960(+)
IS200/IS605 family transposase ISHvo24 (FPNEJFIP_00020)
FPNEJFIP_00021
FPNEJFIP_00022
Alcohol dehydrogenase [acceptor] (FPNEJFIP_00023)
IMGPR_plasmid_3300028342_000245 13986:20485(+)
IS200/IS605 family transposase ISHvo24 (CBJCOHHN_00021)
CBJCOHHN_00022
IMGPR_plasmid_3300028357_000210 14105:18334(+)
3000 nt