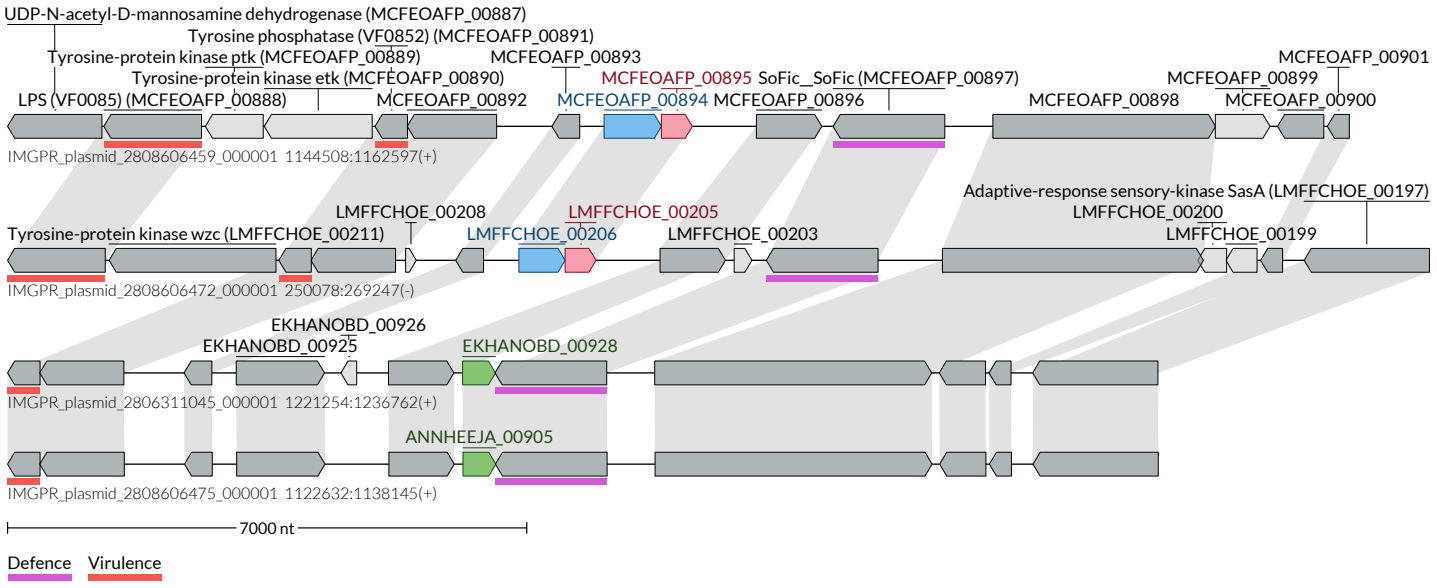
UDP-N-acetyl-D-mannosamine dehydrogenase (MCFEOAFP_00887)
Tyrosine phosphatase (VF0852) (MCFEOAFP_00891)
Tyrosine-protein kinase ptk (MCFEOAFP_00889)
MCFEOAFP_00893
MCFEOAFP_00901
Tyrosine-protein kinase etk (MCFEOAFP_00890)
MCFEOAFP_00895
SoFic_SoFic (MCFEOAFP_00897)
MCFEOAFP_00899
LPS (VF0085) (MCFEOAFP_00888)
MCFEOAFP_00892
MCFEOAFP_00894
MCFEOAFP_00896
MCFEOAFP_00898
MCFEOAFP_00900
IMGPR_plasmid_2808606459_000001 1144508:1162597(+)
Adaptive-response sensory-kinase SasA (LMFFCHOE_00197)
LMFFCHOE_00208
LMFFCHOE_00205
LMFFCHOE_00200
Tyrosine-protein kinase wzc (LMFFCHOE_00211)
LMFFCHOE_00206
LMFFCHOE_00203
LMFFCHOE_00199
IMGPR_plasmid_2808606472_000001 250078:269247(-)
EKHANOBD_00926
EKHANOBD_00925
EKHANOBD_00928
IMGPR_plasmid_2806311045_000001 1221254:1236762(+)
ANNHEEJA_00905
IMGPR_plasmid_2808606475_000001 1122632:1138145(+)
7000 nt
Defence
Virulence