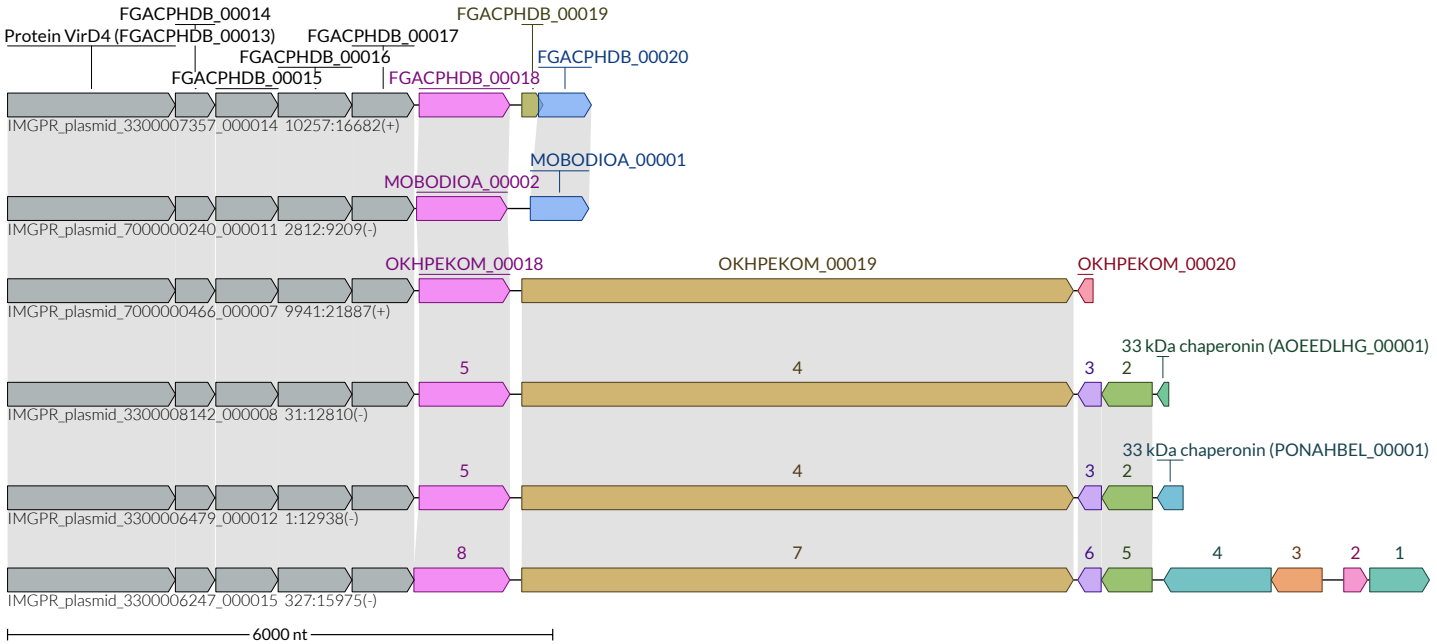
FGACPHDB_00014
Protein VirD4 (FGACPHDB_00013)
FGACPHDB_00017
FGACPHDB_00016
FGACPHDB_00015
FGACPHDB_00019
FGACPHDB_00020
FGACPHDB_00018
IMGPR_plasmid_3300007357_000014 10257:16682(+)
MOBODIOA_00001
MOBODIOA_00002
IMGPR_plasmid_7000000240_000011 2812:9209(-)
OKHPEKOM_00018
OKHPEKOM_00019
OKHPEKOM_00020
IMGPR_plasmid_7000000466_000007 9941:21887(+)
33 kDa chaperonin (AOEEDLHG_00001)
5
4
3
2
IMGPR_plasmid_3300008142_000008 31:12810(-)
33 kDa chaperonin (PONAHBEL_00001)
5
4
3
2
IMGPR_plasmid_3300006479_000012 1:12938(-)
8
7
6
5
4
3
2
1
IMGPR_plasmid_3300006247_000015 327:15975(-)
6000 nt