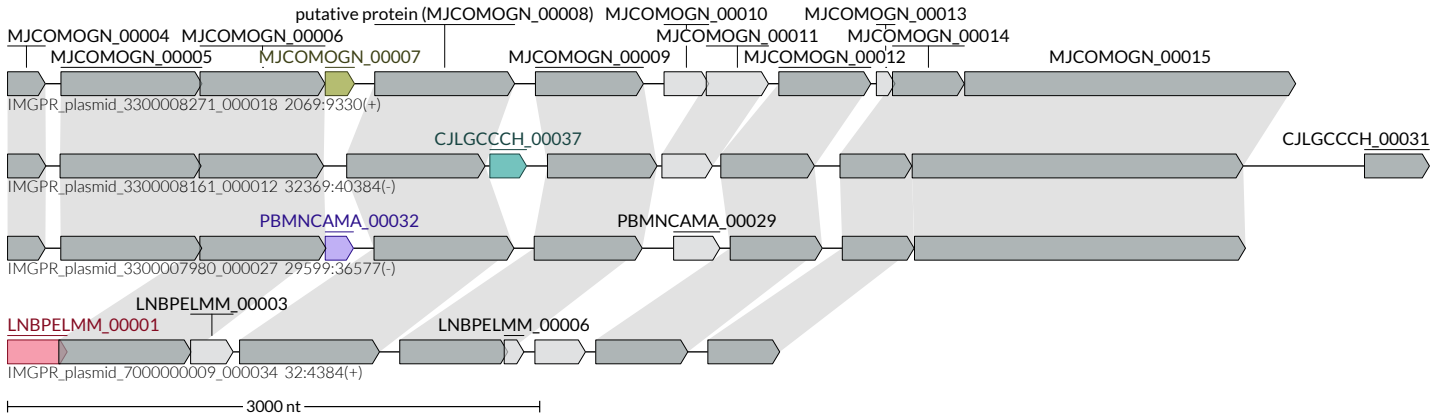
putative protein (MJCOMOGN_00008)
MJCOMOGN_00010
MJCOMOGN_00013
MJCOMOGN_00004
MJCOMOGN_00006
MJCOMOGN_00011
MJCOMOGN_00014
MJCOMOGN_00005
MJCOMOGN_00007
MJCOMOGN_00009
MJCOMOGN_00012
MJCOMOGN_00015
IMGPR_plasmid_3300008271_000018 2069:9330(+)
CJLGCCCH_00037
CJLGCCCH_00031
IMGPR_plasmid_3300008161_000012 32369:40384(-)
PBMNCAMA_00032
PBMNCAMA_00029
IMGPR_plasmid_3300007980_000027 29599:36577(-)
LNBPELMM_00003
LNBPELMM_00001
LNBPELMM_00006
IMGPR_plasmid_7000000009_000034 32:4384(+)
3000 nt