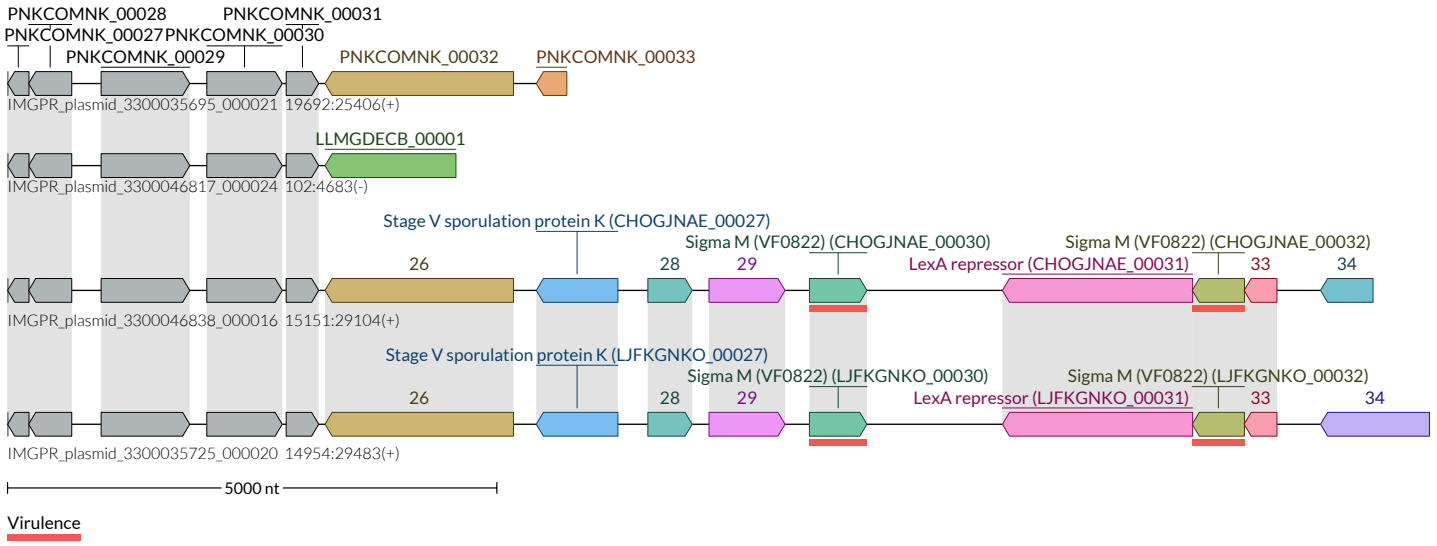
PNKCOMNK_00028
PNKCOMNK_00031
PNKCOMNK_00027
PNKCOMNK_00030
PNKCOMNK_00029
PNKCOMNK_00032
PNKCOMNK_00033
IMGPR_plasmid_3300035695_000021 19692:25406(+)
LLMGDECB_00001
IMGPR_plasmid_3300046817_000024 102:4683(-)
Stage V sporulation protein K (CHOGJNAE_00027)
Sigma M (VF0822) (CHOGJNAE_00030)
Sigma M (VF0822) (CHOGJNAE_00032)
26
28
29
LexA repressor (CHOGJNAE_00031)
33
34
IMGPR_plasmid_3300046838_000016 15151:29104(+)
Stage V sporulation protein K (LJFKGNKO_00027)
Sigma M (VF0822) (LJFKGNKO_00030)
Sigma M (VF0822) (LJFKGNKO_00032)
26
28
29
LexA repressor (LJFKGNKO_00031)
33
34
IMGPR_plasmid_3300035725_000020 14954:29483(+)
5000 nt
Virulence