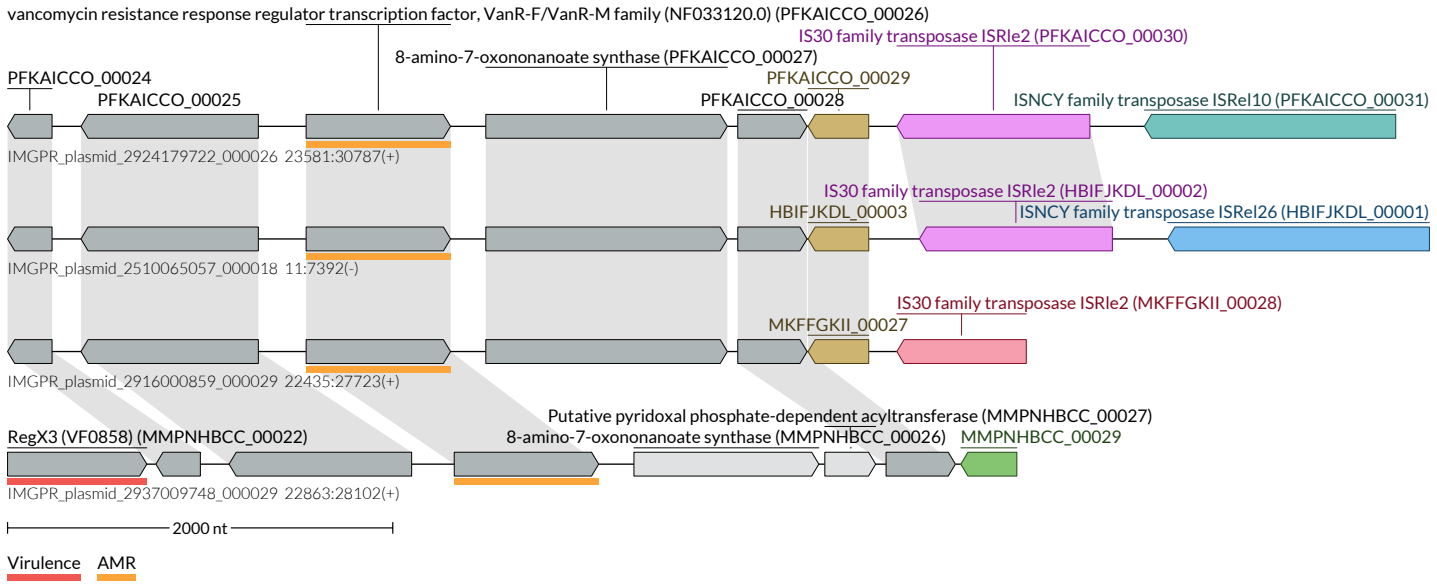
vancomycin resistance response regulator transcription factor, VanR-F/VanR-M family (NF033120.0) (PFKAICCO_00026)
IS30 family transposase ISRle2 (PFKAICCO_00030)
8-amino-7-oxononanoate synthase (PFKAICCO_00027)
PFKAICCO_00029
PFKAICCO_00024
PFKAICCO_00025
PFKAICCO_00028
ISNCY family transposase ISRel10 (PFKAICCO_00031)
IMGPR_plasmid_2924179722_000026 23581:30787(+)
IS30 family transposase ISRle2 (HBIFJKDL_00002)
HBIFJKDL_00003
ISNCY family transposase ISRel26 (HBIFJKDL_00001)
IMGPR_plasmid_2510065057_000018 11:7392(-)
IS30 family transposase ISRle2 (MKFFGKII_00028)
MKFFGKII_00027
IMGPR_plasmid_2916000859_000029 22435:27723(+)
Putative pyridoxal phosphate-dependent acyltransferase (MMPNHBCC_00027)
RegX3 (VF0858) (MMPNHBCC_00022)
8-amino-7-oxononanoate synthase (MMPNHBCC_00026)
MMPNHBCC_00029
IMGPR_plasmid_2937009748_000029 22863:28102(+)
2000 nt
Virulence
AMR