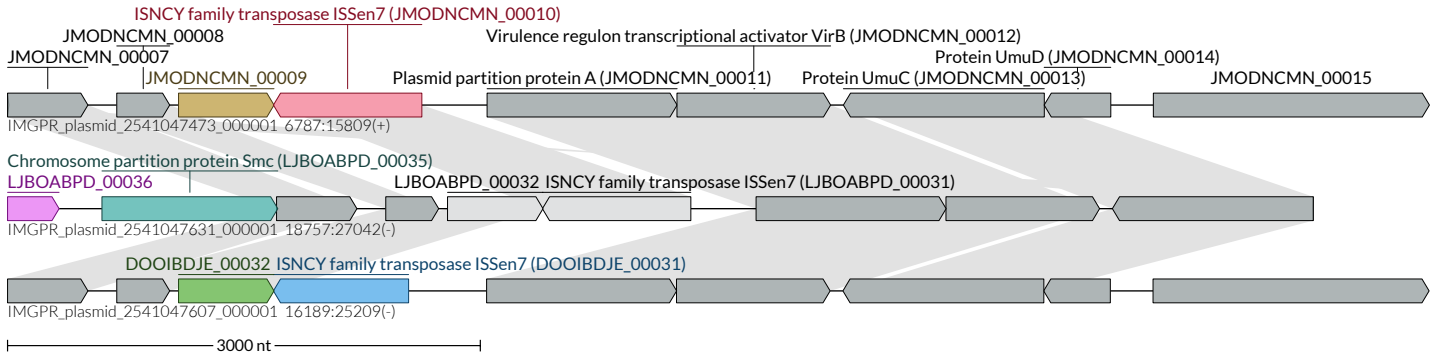
ISNCY family transposase ISSen7 (JMODNCMN_00010)
JMODNCMN_00008
JMODNCMN_00007
JMODNCMN_00009
Virulence regulon transcriptional activator VirB (JMODNCMN_00012)
Protein UmuD (JMODNCMN_00014)
Plasmid partition protein A (JMODNCMN_00011)
Protein UmuC (JMODNCMN_00013)
JMODNCMN_00015
IMGPR_plasmid_2541047473_000001 6787:15809(+)
Chromosome partition protein Smc (LJBOABPD_00035)
LJBOABPD_00036
LJBOABPD_00032 ISNCY family transposase ISSen7 (LJBOABPD_00031)
IMGPR_plasmid_2541047631_000001 18757:27042(-)
DOOIBDJE_00032 ISNCY family transposase ISSen7 (DOOIBDJE_00031)
IMGPR_plasmid_2541047607_000001 16189:25209(-)
3000 nt