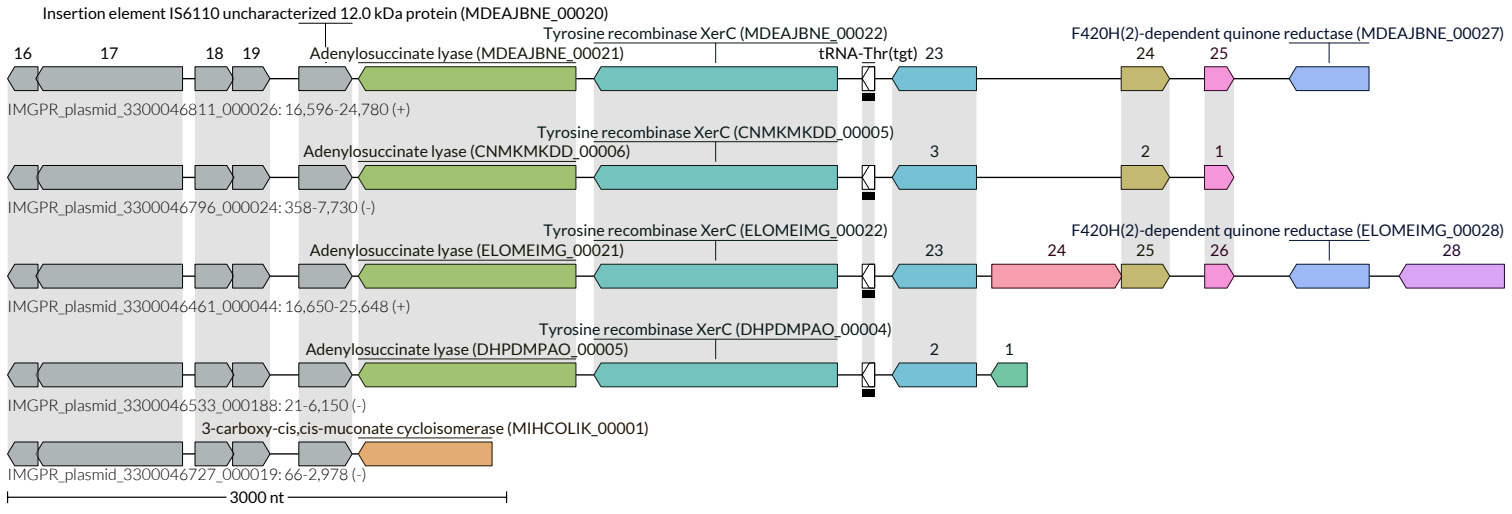
Insertion element IS6110 uncharacterized 12.0 kDa protein (MDEAJBNE_00020)
Tyrosine recombinase XerC (MDEAJBNE_00022)
F420H(2)-dependent quinone reductase (MDEAJBNE_00027)
16
17
18
19
Adenylosuccinate lyase (MDEAJBNE_00021)
tRNA-Thr(tgt)
23
24
25
IMGPR_plasmid_3300046811_000026: 16,596-24,780 (+)
Tyrosine recombinase XerC (CNMKMKDD_00005)
Adenylosuccinate lyase (CNMKMKDD_00006)
3
2
1
IMGPR_plasmid_3300046796_000024: 358-7,730 (-)
Tyrosine recombinase XerC (ELOMEIMG_00022)
F420H(2)-dependent quinone reductase (ELOMEIMG_00028)
Adenylosuccinate lyase (ELOMEIMG_00021)
23
24
25
26
28
IMGPR_plasmid_3300046461_000044: 16,650-25,648 (+)
Tyrosine recombinase XerC (DHPDMPAO_00004)
Adenylosuccinate lyase (DHPDMPAO_00005)
2
1
IMGPR_plasmid_3300046533_000188: 21-6,150 (-)
3-carboxy-cis,cis-muconate cycloisomerase (MIHCOLIK_00001)
IMGPR_plasmid_3300046727_000019: 66-2,978 (-)
3000 nt
tRNA