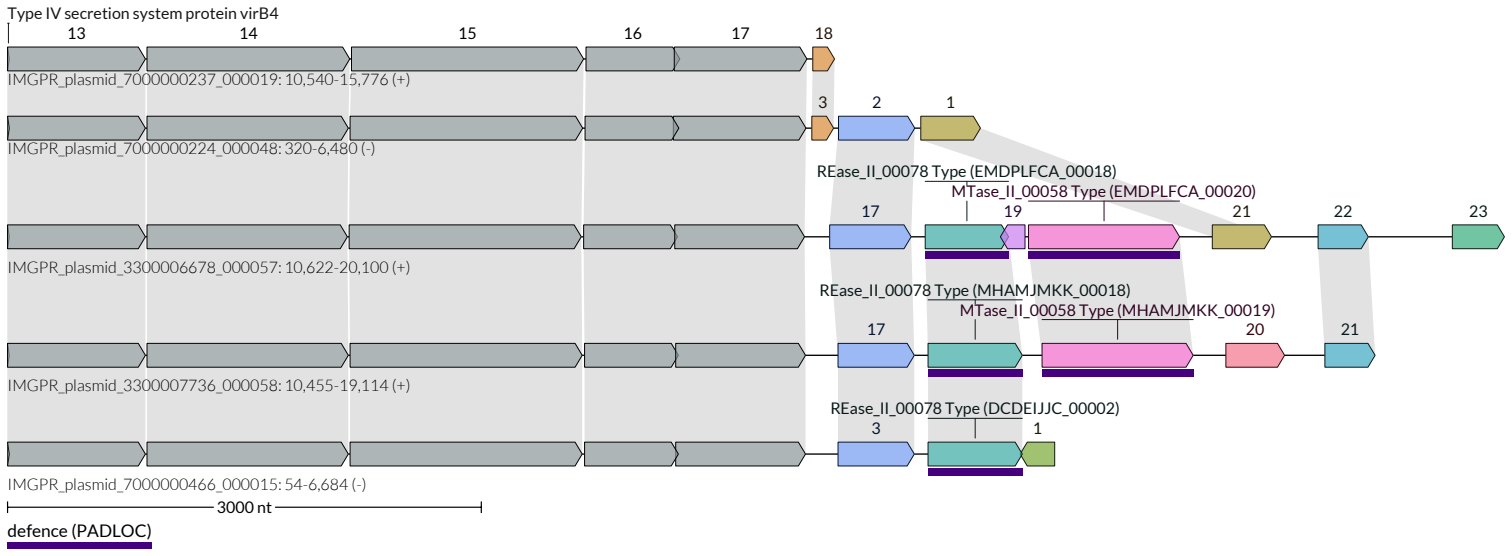
Type IV secretion system protein virB4
13
14
15
16
17
18
IMGPR_plasmid_7000000237_000019: 10,540-15,776 (+)
3
2
1
IMGPR_plasmid_7000000224_000048: 320-6,480 (-)
REase_II_00078 Type (EMDPLFCA_00018)
MTase_II_00058 Type (EMDPLFCA_00020)
17
19
21
22
23
IMGPR_plasmid_3300006678_000057: 10,622-20,100 (+)
REase_II_00078 Type (MHAMJMKK_00018)
MTase_II_00058 Type (MHAMJMKK_00019)
17
20
21
IMGPR_plasmid_3300007736_000058: 10,455-19,114 (+)
REase_II_00078 Type (DCDEIJJC_00002)
3
1
IMGPR_plasmid_7000000466_000015: 54-6,684 (-)
3000 nt
defence (PADLOC)